SUZUKI RM-Z 450 Evolution complete exhaust system
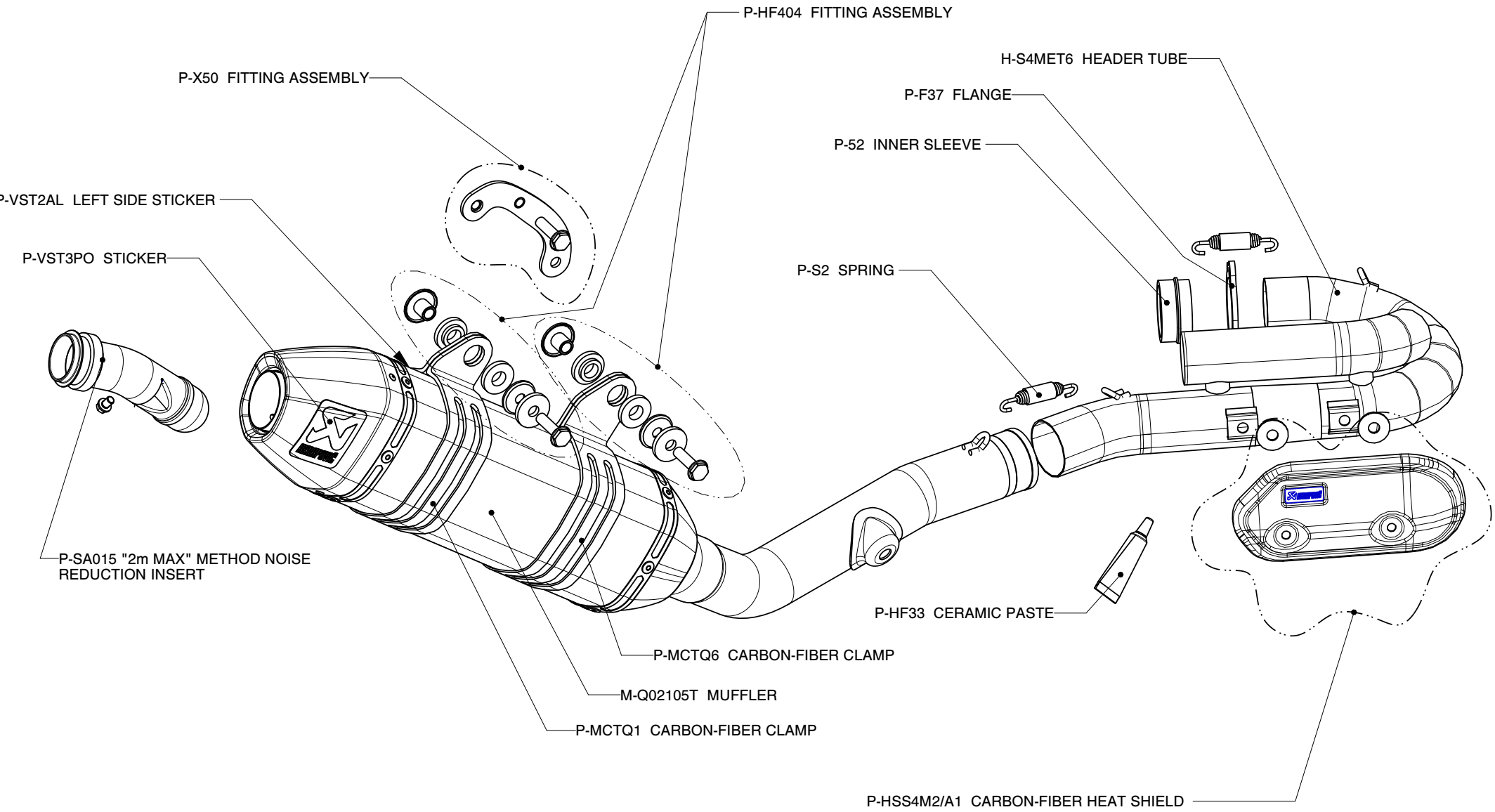
Product code: S-S4MET7-QT